PPC-315SW ADL_N
PPC-318SW ADL_N
PPC-321SW ADL_N

15.6"/18.5"/21.5" Fanless Widescreen Panel PC with Intel® N97 Quad-Core Processor

Features

- Intel® Alder Lake N97 2.0GHz quad-core processor
- 15.6"/18.5"/21.5" true-flat TFT LCD with projected capacitive touch control
- Fanless design with low power consumption
- Supports 1 x M.2 M Key 2242/2280 (SATA or NVME PCIe x 1), 1 x 2.5" SATA bay for storage
- Supports dual displays (1 x external DP)
- Supports iDoor
- Support PCI or PCIe
- Supports VESA 75
- IP66-rated front panel

Introduction

PPC-300 ADL_N is a high-value, ultra-slim panel PC equipped with TFT LCD, and low-power Intel® N97 quad-core, 2.0GHz, processor to provide highperformance computing in a compact and fanless system. For high durability and functionality, the PPC-300 ADL_N features an IP66-rated front panel, multi-touch projected capacitive touchscreen, die cast aluminum alloy enclosure, two serial ports, four USB ports, and two GbE LAN ports, making it suitable for diverse industrial applications.

Specifications

Model Name		PPC-315SW ADL_N	PPC-318SW ADL_N	PPC-321SW ADL_N
System	CPU	Intel® Alder lake N N97 quad core		
	Frequency	2.0 GHz upto 3.6GHz with Turbo		
	Cache	6 MB		
	Memory	1 x SODIMM, DDR5 4800MHz, max. 16GB		
	Storage	1 x M.2 M Key 2242/2280 (SATA or NVME PCIe x 1), 1 x 2.5" SATA bay*		
	Network (LAN)	2 x 10/100/1000/2500 Mbps Ethernet (Intel I226 LM)		
	I/O	2 x RS-232/422/485 2 x USB3.2, 2 x USB2.0 1 x GPIO & 2 x USB 2.0 (optional)* 1 x DP 1 x Line out		
	Expansion	1 x M.2 B key 2242 or 3042/3052 (SATA, PCIe X1 ,USB 3.0 & SIM slot)*** 1 x M.2 E Key 2230 (PCIe & USB 2.0) 1 x iDoor (optional)* 1 x PCI or PCIe x1 (optional)**		
	Watchdog Timer	255 timer levels; setup by software		
	Security	1 x TPM2.0 (on board as default)		
	Speaker	1 x 2W		
Physical Characteristics	Dimensions	395.7 x 245.1 x 50.4mm (15.6 x 9.6 x 2.0 in)	464.5 x 285.5 x 53.4mm (18.3 x 11.2 x 2.1 in)	529.6 x 321.3 x 53.4mm (20.9 x 12.6 x 2.1 in)
	Weight	4.26 kg (9.4 lb)	5.17 kg (11.4 lb)	6.24 kg (13.8 lb)
OS Support	OS Support	Windows 10 LTSC, Windows 11, Linux, Andriod (by request)		
Power Comsumption	Input Voltage	$24V_{DC} \pm 30\%$		
	Power Consumption	35W (Burn-in test 8.1 in Windows 10 64-bit)	40W (Burn-in test 8.1 in Windows 10 64-bit)	45W (Burn-in test 8.1 in Windows 10 64-bit)
LCD	Display Type	15.6" FHD TFT LED LCD	18.5" WXGA TFT LED LCD	21.5" FHD TFT LED LCD
	Max. Resolution	1920 x 1080	1366 x 768	1920 x 1080
	Viewing Angle	89 (left), 89 (right), 89 (up), 89 (down)	85 (left), 85 (right), 80 (up), 80 (down)	89 (left), 89 (right), 89 (up), 89 (down)
	Luminance (cd/m^2)	350	450	250
	Contrast Ratio	800	1000	1000
	Backlight Lifetime	50,000hrs (min.)	50,000hrs (min.)	50,000hrs (min.)
Touchscreen	Touchscreen	Multi-touch projected capacitive		
	Light Transmission	>86%		
	Controller	USB Interface		
Environment	Operating Temperature	-10 ~ 50 °C (32 ~ 122 °F)		
	Storage Temperature	-20 ~ 60 °C (-4 ~ 140 °F)		
	Relative Humidity	95% @ 40 °C (Non-Condensing)		
	Shock	Operating 10 G Peak Acceleration (11 ms Duration), Follows IEC 60068-2-27		
	Vibration	Operating Random Vibration Test 5~500Hz, 2Grms @with SSD, Follows IEC 60068-2-64		
	EMC	CE,FCC Class A, BSMI, UKCA		
	Safety	CB, UL, CCC, UKCA		
	Front Panel Protection	IP66 compliant		

All product specifications are subject to change without notice.

Last updated: 5-Aug-2025

Dimensions

Unit: mm

PPC-315SW ADL_N

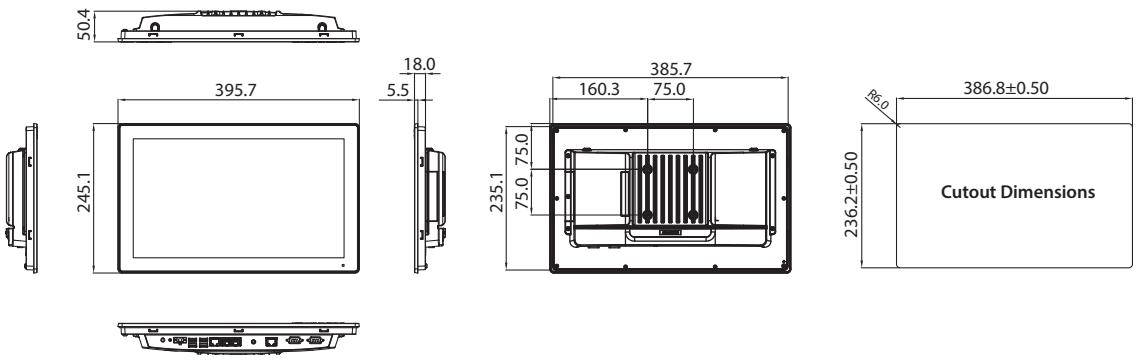

Panel Cutout Dimensions: 386.8 x 236.2 mm (15.23 x 9.30 in)

PPC-318SW ADL_N

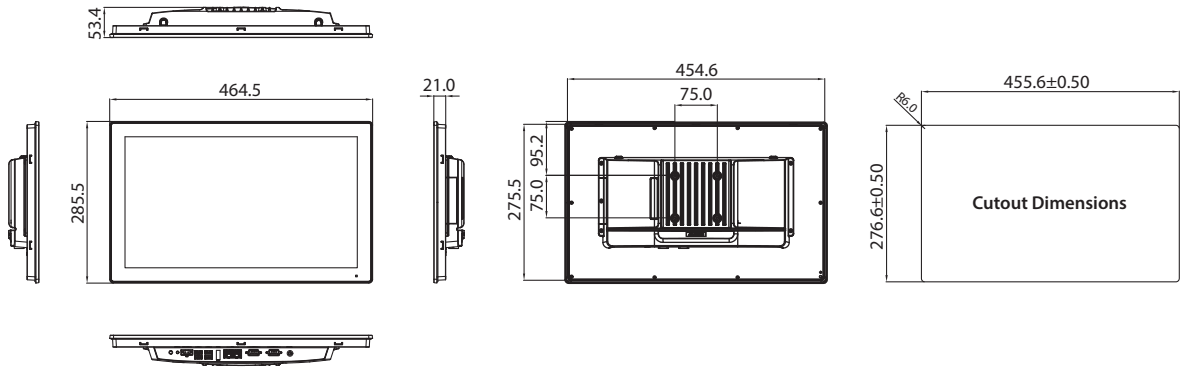

Panel Cutout Dimensions: 455.6 x 276.6 mm (17.94 x 10.89 in)

PPC-321SW ADL_N

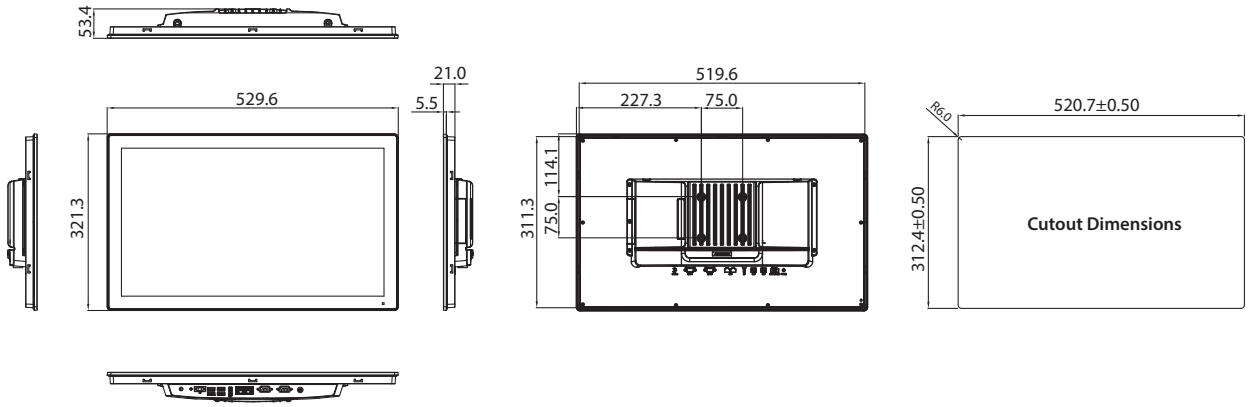

Panel Cutout Dimensions: 520.7 x 312.4 mm (20.5 x 12.3 in)

Dimensions

The dimension with the PCI or PCIe expansion box (98R1P300S00)

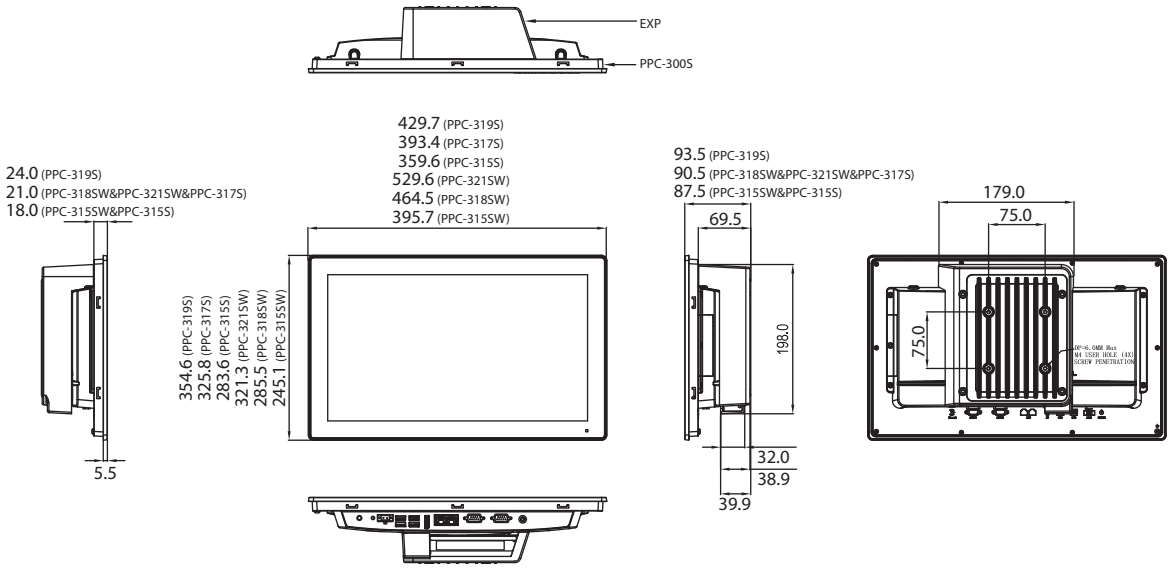

Ordering Information

Part Number	Description
PPC-315SW-PN9A	15.6" PPC w/Intel N97, P-Cap
PPC-318SW-PN9A	18.5" PPC w/Intel N97, P-Cap
PPC-321SW-PN9A	21.5" PPC w/Intel N97, P-Cap
96PSA-A90W19OT-3	Power adapter 100-240V 90W 19V
1700001524	POWER Cord 3P UL 10A 125V 180cm
170203183C	POWER Code 3P Europe (WS-010+083)183 cm
1700008921	POWER CORD 3P/3P POWER SUPPLY 1.8 M PSE
96CB-POWER-B-1.8MB	Power code 3P CCC(China) 1.8M
PPC-174T-WL-MTE	Wall mount kit for PPC series
PPC-STAND-A1E	Stand for PPC series
PPC-ARM-A03	VESA Standard for PPC series
PPC-WLAN-D2	M.2, WiFi6 +BT5.2, 2T2R, w/Antenna, Mini PCIe
98R3P300010	PPC-300 RFID Read only 13.56MHz&125k
98R1P300S00	Add-on box for PCI or PCIe expansion (include PCI / PCIe riser card)**
98R1P300S10	Additional ports module (2 x USB 2.0 + 1 x GPIO)*

* iDOOR, additional ports or 2.5" SATA bay can't be installed in the same time since they share the same space.
** PCIe riser card supports PCIe x1 singal, but the slot is PCIe x4 (PCIe x1 compatiable).
*** For SATA Storage, choose either the B key or the 2.5" SATA bay.
For PCIe expansion, choose either the B key or the PCIe slot.

Support iDoor Modules

Part Number	Description
PCM-34R1TP-AE	1 port Gigabit Ethernet, Intel® I225, 2.5Gb/s, TSN
PCM-34R2GL-AE	2 ports Gigabit Ethernet, Intel® I350
PCM-34D2R4-AE	2 ports Isolated RS-422/485, DB9
PCM-34D2R2-AE	2 ports Isolated RS-232, DB9
PCM-34D4R4-AE	4 ports non-isolated RS-422/485, DB37 cable
PCM-34D4R2-AE	4 ports non-isolated RS-232, DB37 cable
PCM-37D24DI-AE	4 channels isolated digital I/O with counter, DB37
PCM-23C1CF-BE	1 slot Cfast iDoor for CFast

I/O View

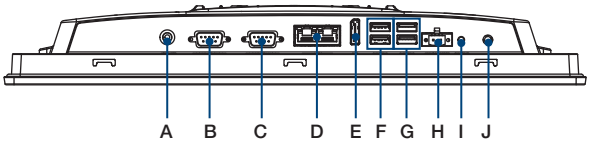

A. Line out
B. COM1: RS-232/422/485
C. COM2: RS-232/422/485
D. 2 x LAN
E. DP
F. 2 x USB 3.2
G. 2 x USB 2.0
H. DC-In
I. Power Button
J. Pre cut hole for power button cable extend